CITY OF NEW RICHMOND
THE CITY BEAUTIFUL

156 East First Street
New Richmond, WI 54017
Ph 715-246-4268 Fax 715-246-7129
www.newrichmondwi.gov

October 13, 2016

TO ALL PLAN COMMISSION MEMBERS:

Fred Horne	**Ron Volkert**
Jim Zajkowski	**David Wilford**
Mike Kastens	**Kyle Hinrichs**
MaryKay Rice	**Sarah Skinner (ex officio)**

This is to notify you that there is a Plan Commission meeting scheduled for Tuesday, October 18, 2016 at 5:00 p.m. in the Council Chambers of the Civic Center, 156 East First Street, City of New Richmond, WI.

AGENDA:

1. **Roll Call**
2. **Adoption of Agenda**
3. **Approval of the Minutes of the Previous Meeting, October 4, 2016**
4. **Site Plan and Storm Water Application for Cooper Motors LLC/New Richmond Auto Mall**
5. **Communications and Miscellaneous**
6. **Adjournment**

Fred Horne
Mayor

cc:

The News	**Northwest Cable**	**City Website**
Mike Darrow	**Nick Vivian**	**Mike Demulling**
Bob Meyer	**Tom Rickard**	**Dan Licht**
Jim VanderWyst	**Craig Yehlik**	**Beth Thompson**
Steve Skinner		

PLAN COMMISSION MEETING
OCTOBER 4, 2016 - 5:00 P.M.

Members Present: Fred Horne, Ron Volkert, Mike Kastens, Jim Zajkowski, David Wilford, MaryKay Rice, Kyle Hinrichs and Sarah Skinner (ex-officio)

Others Present: Beth Thompson, Tanya Batchelor, Noah Wiedenfeld, Jeremiah Wendt, Roger Lindloff, Mike Darrow, Jeff Abboud and James Koening

Fred Horne called the meeting to order and roll call was taken.

Jim Zajkowski moved to adopt the agenda as presented, seconded by Mike Kastens and carried.

Mike Kastens moved to approve the minutes of the previous meeting on September 6, 2016, seconded by MaryKay Rice and carried.

Public Hearing

Fred Horne declared the Public Hearing open to discuss an Amendment of the City of New Richmond Official Map to consider interchange alignments at WI HWY 64/North Fourth Street/Wall Street (CR CC). Jeremiah Wendt explained that the original concept included an overpass and closing the Wall Street crossroad. Staff has been working with the DOT and stakeholders in that area to come up with a solution that everyone can support. Several public meetings were held to gather information from property owners along with individual meetings with affected landowners. The solution that everyone supports includes an overpass that is west of Wall Street and connects at North Fourth Street and Wall Street north of the National Guard building and adjacent pond. Discussion followed. The Public Hearing was declared closed. Mike Kastens moved to approve the amendment to the official right of way map, seconded by Jim Zajkowski and carried. Fred Horne asked that the map of the amendment be sent to property owners along that area. The amendment will be taken to Council for action in November.

Amendment of Section 121-44 of the Zoning Ordinance Regulating Signs

There was discussion regarding the sign ordinance. At the August Plan Commission meeting there was concern expressed regarding temporary signs. Since that meeting, Beth and Noah have met with Farm & Home regarding their temporary sign and checked into the cost for them to have a secondary ground sign. This would actually save them more than $1000 the first year and $2,000 each year thereafter so they agreed to put up the secondary ground sign. Any business located on a frontage road, under the new sign ordinance, would be allowed a second ground sign. Temporary signs are still allowed for up to 2 two-week periods per year. Discussion followed. Fred Horne questioned how non-compliant signs will be treated. This is covered in another second of the zoning ordinance. Noah has created a simplified document explaining the sign ordinance for the building inspection area to hand out that is much more user friendly than reading through the new ordinance. Jim Zajkowski moved to approve the amendment to Section 121-44 of the Zoning Ordinance regulating signs, seconded by MaryKay Rice and carried. Fred Horne voted no. This ordinance will be discussed by the Council in October.

Kyle Hinrichs moved to adjourn the meeting, seconded by David Wilford and carried.

Meeting adjourned at 5:41 p.m.

Tanya Batchelor
City Clerk

TPC
3601 Thurston Avenue N, Suite 100
Anoka, MN 55303
Phone: 763.231.5840
Facsimile: 763.427.0520
TPC@PlanningCo.com

MEMORANDUM

TO: Beth Thompson

FROM: D. Daniel Licht, AICP

DATE: 13 October 2016

RE: New Richmond – Cooper Motors LLC; New Richmond Auto Mall

TPC FILE: 164.02

BACKGROUND

Cooper Motors, LLC has submitted plans for development of a property located at the northwest quadrant of North Knowles Avenue (STH 65) and West North Shore Drive with an automobile sales use. Applications for site plan review are processed in accordance with Section 121-31 of the Zoning Ordinance and require approval by the Plan Commission.

Exhibits:

A. Site location
B. Architectural plans dated 9-21-16
C. Civil plans dated 10-04-16

ANALYSIS

Comprehensive Plan. The subject site is guided by the Comprehensive Plan for commercial uses based on proximity, access and visibility to STH 64 and STH 65. An automobile sales use would be consistent with the planned land uses for the subject site.

Zoning. The subject site is zoned Z3, Multi Use/Corridor District based on the land uses guided by the Comprehensive Plan. Vehicle sales and service uses are allowed in the Z3 District subject to site plan review in accordance with Section 121-31 of the Zoning Ordinance.

Lot Coverage. Table 6 of the Zoning Ordinance establishes a lot coverage limit of 70 percent of the area of the lot, consisting of all buildings, parking areas and other impervious surfaces. The subject site is 0.862 acres in area. A table on the site plan identifies the area of impervious surfaces on the subject site. Lot coverage complies with the Zoning Ordinance limits, but the pervious area material must be identified.

Setbacks. Table 6 of the Zoning Ordinance establishes setback requirements applicable to the subject site. The proposed principal building and off-street parking and automobile display areas comply with applicable setback requirements.

Setbacks								
	Building				Parking			
	ROW			Side	ROW			Side
Yard	West	North	East	South	West	East	North	South
Required	25ft.	20ft.	20ft.	10ft.	15ft.	10ft.	10ft.	5ft.

Building. The site plan illustrates a 6,080 square foot principal building. The principal building may be up to 4 stories in height and the proposed building is 20 feet in height with a flat roof, which complies with the Zoning Ordinance. The submitted building elevations identify the exterior materials to be two colors of EIFS on all four sides of the building. Finished metal panels are used as accents on all four sides of the building and stone is used on the north and east elevations to highlight the sales area. The proposed exterior finish of the building complies with the requirements of Section 121-49.G of the Zoning Ordinance.

Landscaping. A landscape plan has been submitted provided and is subject to the requirements of Section 121-55 of the Zoning Ordinance, including Table 15. The outdoor sales area does not need to be screened per Section 121-48.A.3.a(ii) of the Zoning Ordinance. The row of plantings along the berm on the west side of the subject site are within the right-of-way or drainage and utility easement, which the property owner must understand is subject to potential removal by the City. Section 121-55.I.2 of the Zoning Ordinance requires the developer to provide a financial guarantee equal to 125 percent of the cost for materials and labor for proposed landscape plan. The security is to be held by the City until it is verified that all plantings have survived through two winter seasons between October 31 and April 30.

Outdoor Display. The site plan includes 27 designated parking stalls within the parking area for vehicle display, as well as a proposed display area east of the building on a pervious surface. Section 121-48.A.3.c and Section 121-51.A.5.c of the Zoning Ordinance require the outdoor display area to be surfaced with a permanent pavement material appropriate for the proposed vehicle weights, which the display area is and complies with the Zoning Ordinance.

Access. The subject site is allowed one access to Hatfield Court with a maximum width of 24 feet by Section 70-39 of the City Code unless the Public Works Director determines that additional accesses and/or driveway width are warranted to provide for adequate access and

circulation within the lot. The proposed driveway is 24 feet wide as allowed by the Zoning Ordinance.

Off-Street Parking. Auto sales and/or service uses must provide off-street parking separate from the area devoted to outdoor display areas for vehicles offered for sale. In accordance with Section 121-52.A.7 of the Zoning Ordinance where a parking requirement is not listed for a specific use, City staff may utilize references from APA or ITE to determine the number of off-street parking stalls required. Based on this provision of the Zoning Ordinance, the number of required parking stalls for the proposed use is calculated as follows:

Use	Requirement	Area	# of Stalls
Showroom/Office	1 stall/500sf.	2,652sf.	6
Service Bays	4 stalls + 2 stalls per bay	6 bays	16
Storage	1 stall/1,000sf.	1,224sf.	2
Outdoor Sales Area	1 stall/3,000sf.	4,536sf.	2
		Total	26

The site plan provides 17 off street parking stalls separate from the outdoor display area, whereas 26 parking stalls are required by the Zoning Ordinance for the propose use. The site plan provides a pedestrian connection between the subject site and the lot to the south. Such an arrangement may be used to off-set the deficit of required parking on the subject site. Section 121-52.A.6 of the Zoning Ordinance establishes provisions for administrative approval of shared parking arrangements between abutting properties. The office use to the south is required to provide 7 off-street parking stalls and there is sufficient area within the existing paved area for 16 parking stalls to be designated on the property to accommodate that use and the shared parking with the abutting auto sales use. A joint parking easement must be recorded with both properties to effect this agreement. Table 13 of the Zoning Ordinance requires the dimensions of the parking area and auto sales display area provide for 9 foot by 18 foot stalls accessed by 26 foot wide drive aisles. Section 121-52.A.5 of the Zoning Ordinance requires an asphalt or concrete surface for the parking stalls and drive aisles surrounded by perimeter concrete curb. The design and construction of the parking area complies with the Zoning Ordinance.

Exterior Lighting. Use of exterior lighting is regulated by Section 121-51 of the Zoning Ordinance. All exterior fixtures must use a 90 degree horizontal cutoff and the intensity of light measured at the property lines is regulated. A photometric lighting plan illustrating the illumination pattern and intensity of proposed exterior lighting has not been submitted and is required to be provided with the building permit application.

Signs. Section 121-44 of the Zoning Ordinance regulates the number, area, and height of signs allowed to be placed on the subject site. The building elevations drawings indicate wall signs on the north and east sides of the proposed building. One freestanding sign is shown on the site plans in the yard adjacent to Knowles Avenue (Hwy. 65) but no details are provided

regarding area or height. All sign installations are subject to issuance of a sign permit and review and approval of the Building Inspector.

Grading. The developer has prepared a grading, drainage and erosion control plan for the development of the subject site in accordance with Chapter 109, Article IV of the City Code. All grading, drainage and erosion control issues are subject to review and approval of the Public Works Director and the proposed development complies with the City Code.

Utilities. A utility plan for connection to municipal sanitary sewer, water and electric services has been submitted. All utility issues are subject to review and approval of the Public Works Director and have been approved as shown on the submitted plans.

Easements. The subject site was established by a CSM approved subject to dedication of drainage and utility easements at the perimeter of the lot, which at the time were 12 feet or 6 feet overlying side lot lines. The site plan indicates there is a 12 foot drainage and utility easement along the south lot line that the proposed building encroaches into. The developer must verify the location of the drainage and utility easement and if the proposed building encroaches, either revise the site plan to remove the building from the drainage and utility easement or petition for a vacation of a portion of the drainage and utility easement to a width of 10 feet.

RECOMMENDATION

The Development Review Committee discussed application at their meeting on 28 September 2016. The developer submitted revised plans based on the comments of the DRC and City staff recommends approval of the application as outlined below.

POSSIBLE ACTIONS

A. Motion to approve a site plan application for New Richmond Auto Mall subject to the following situations:

   1. The developer shall provide a financial guarantee equal to 125 percent of the cost for materials and labor for proposed landscape plan to be held by the City until it is verified that all plantings have survived through two winter seasons between October 31 and April 30.

   2. The developer shall record a joint parking easement on the subject site and abutting site.

3. A photometric lighting plan illustrating the illumination pattern and intensity of proposed exterior lighting must be submitted and must comply with Section 121-51 of the Zoning Ordinance.

4. All signs shall comply with Section 121-44 of the Zoning Ordinance at the time a permit issued for their construction on the property.

5. The developer shall either revise the site plan to remove the building from the drainage and utility easement along the south lot line or petition for a vacation of a portion of the drainage and utility easement to a width of 10 feet.

B. Motion to **deny** the request based on a finding that the application does not.

C. Motion to **table**.

c. Mike Darrow, City Administrator
Sarah Skinner, Building Inspector
Jeremiah Wendt, Public Works Director

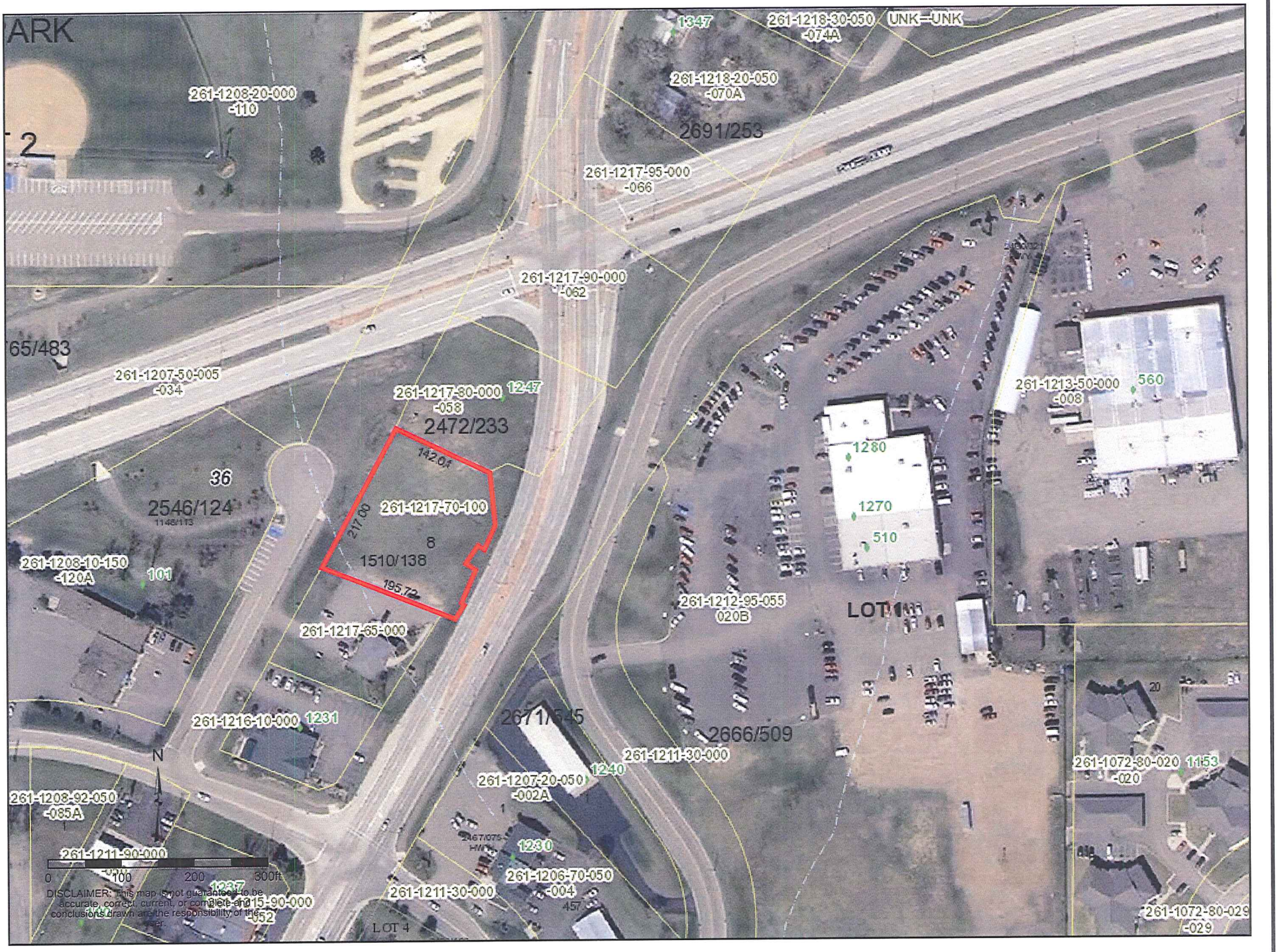

ARK
261-1208-20-000
-110
1347
261-1218-30-050
-074A
UNK--UNK
261-1218-20-050
-070A
2691/253
261-1217-95-000
-066
261-1217-90-000
-062
65/483
261-1207-50-005
-034
261-1217-80-000
-058
1247
2472/233
142.01
36
2546/124
1148/113
261-1217-70-100
217.00
8
1510/138
195.72
261-1208-10-150
-120A
101
261-1217-65-000
261-1216-10-000
1231
2671/545
2666/509
261-1211-30-000
1240
261-1207-20-050
-002A
261-1208-92-050
-085A
261-1211-90-000
1230
261-1206-70-050
-004
261-1211-30-000
LOT 4
261-1213-50-000
-008
560
1280
1270
510
261-1212-95-055
020B
LOT 1
261-1072-80-020
-020
1153
261-1072-80-029
-029
N
0
100
200
300ft
DISCLAIMER: This map is not guaranteed to be accurate, correct, current, or complete and conclusions drawn are the responsibility of the user.

NEW RICHMOND AUTO MALL

COMMERCIAL DEVELOPMENT
CITY OF NEW RICHMOND, WI

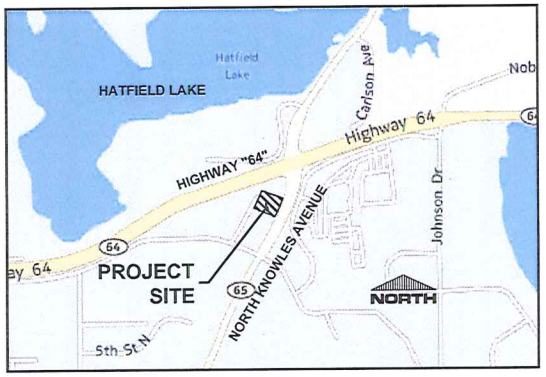

VICINITY MAP
(N.T.S.)

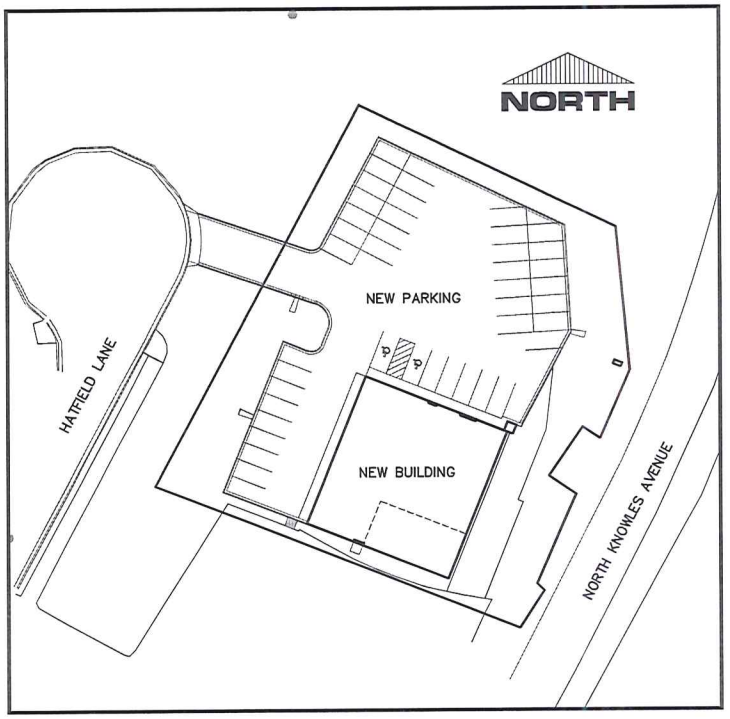

PROJECT SITE
(N.T.S.)

DEVELOPER / OWNER:
MR. SHAWN COOPER
2529 WHITE BEAR AVENUE
MAPLEWOOD, MN 55109
EMAIL: SHAWNCOOP@GMAIL.COM
PHONE: 651-777-0088

ENGINEER:
KRAMER LAND DESIGN STUDIO, LLC.
MR. DANIEL KNOWLTON, P.E.
1818 BRACKETT AVENUE
EAU CLAIRE, WI 54701
EMAIL: DAN@KLDS.NET
PHONE: 715-831-0654

SHEET INDEX:

C100 TITLE SHEET
C101 EXISTING CONDITIONS PLAN
C102 SITE PLAN
C103 GRADING PLAN
C104 EROSION CONTROL PLAN
C105 UTILITY PLAN
C106 LANDSCAPE PLAN
C500 CONSTRUCTION DETAILS
C501 CONSTRUCTION DETAILS

KRAMER LAND DESIGN STUDIO

KLDS PROJECT #: 16019
DATE: 05-23-16
REVISION: 10-04-16

1818 BRACKETT AVENUE EAU CLAIRE, WI 54701
PHONE: (715) 831-0654 EMAIL: INFO@KLDS.NET

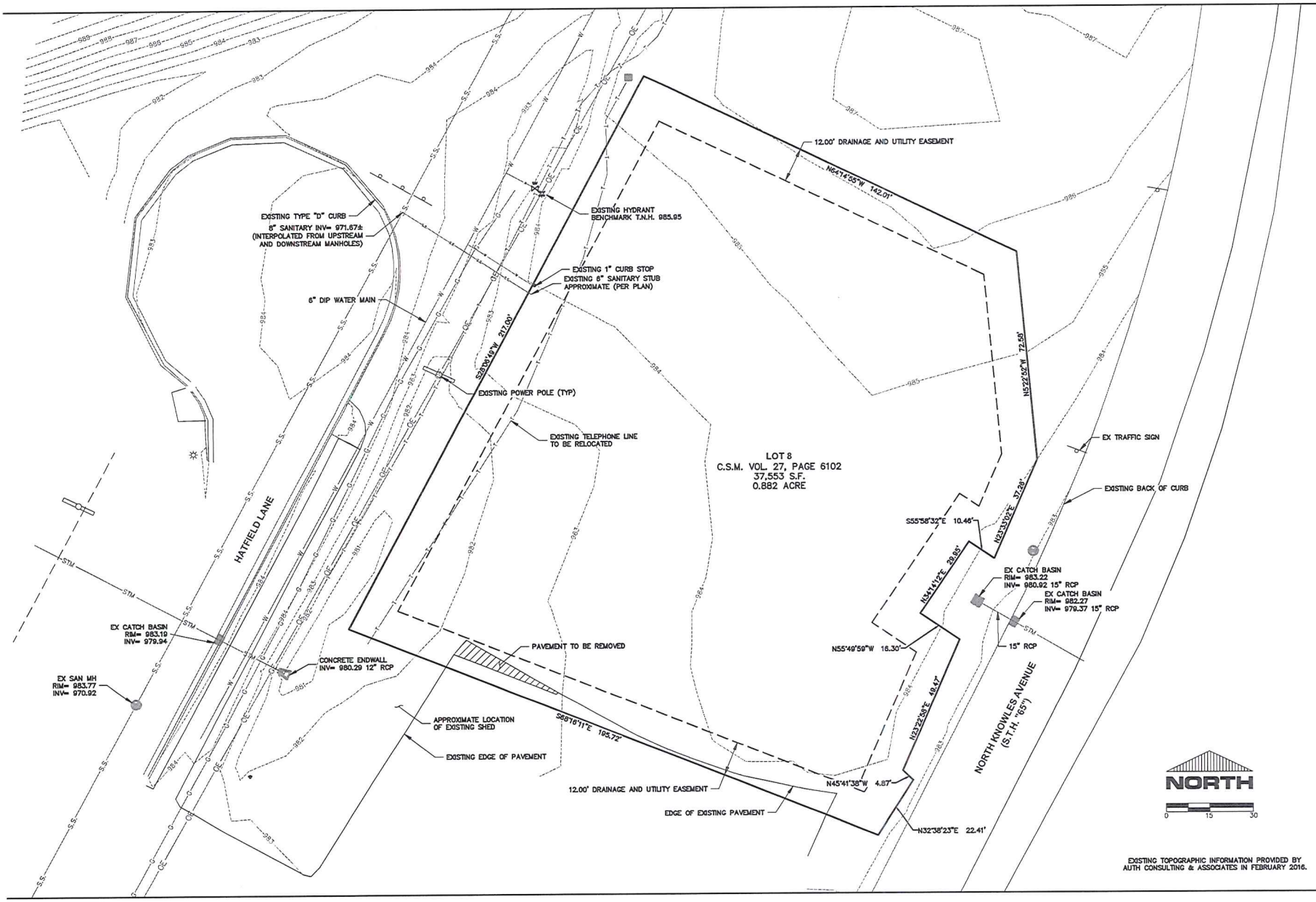

EXISTING TOPOGRAPHIC INFORMATION PROVIDED BY
AUTH CONSULTING & ASSOCIATES IN FEBRUARY 2016.

NEW RICHMOND AUTO MALL
EXISTING CONDITIONS AND DEMO PLAN
NEW RICHMOND, WI

DR BY: DHK
CHK BY: SCK
DATE: 10-04-16

JOB NO: 16019
DWG NAME: EX COND
REVISED: --/--/--

KRAMER LAND DESIGN STUDIO
1618 BRACKETT AVENUE • EAU CLAIRE, WI 54701
PH. (715) 831 0654 • FX. (715) 831 6270 • EMAIL: INFO@LDS.NET

PAGE NO:
C101

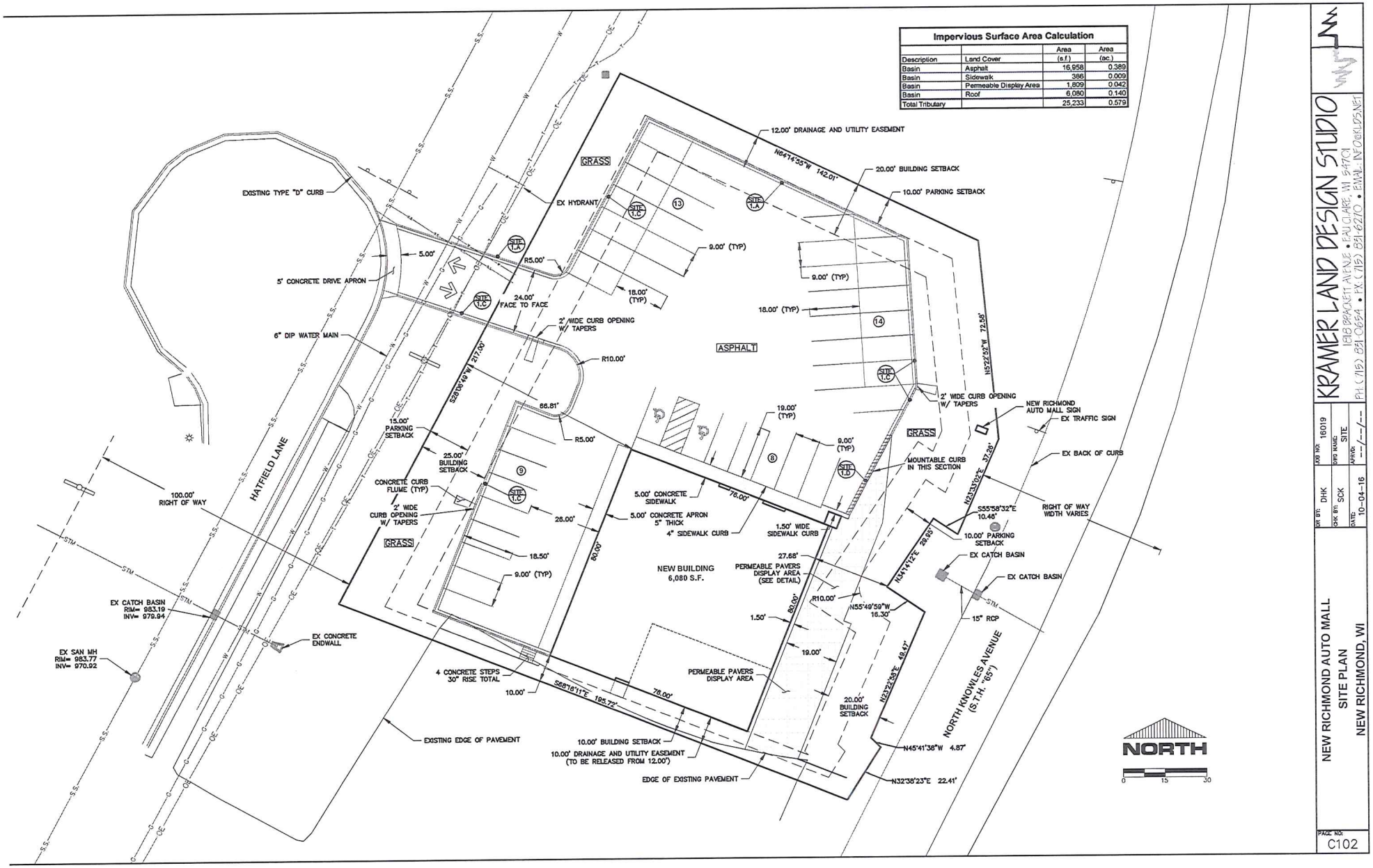

KRAMER LAND DESIGN STUDIO
138 BRACKETT AVENUE • EAU CLAIRE, WI 54701
PH: (715) 831-0654 • FX: (715) 831-6210 • EMAIL: INFO@KLDS.NET

DR. BY: DHK | JOB NO.: 16019
CHK BY: SCK | DWG NAME: SITE
DATE: 10-04-16 | APPVD: --/--/--

NEW RICHMOND AUTO MALL
SITE PLAN
NEW RICHMOND, WI

PAGE NO:
C102

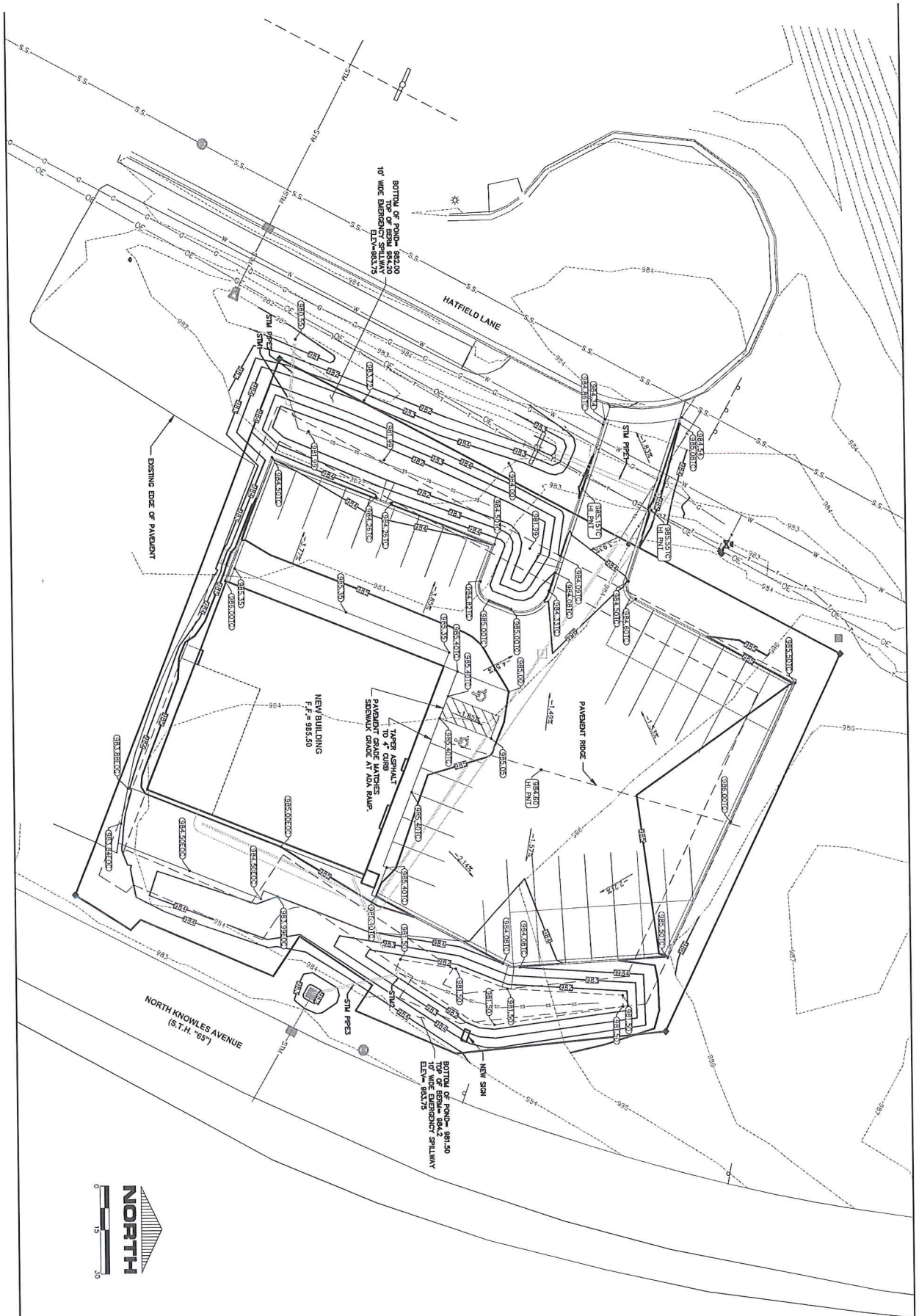

SHEET NO. C103	NEW RICHMOND AUTO MALL GRADING PLAN NEW RICHMOND, WI	DR BY: DHK	JOB NO: 16019	KRAMER LAND DESIGN STUDIO 1818 BRACKETT AVENUE • EAU CLAIRE, WI 54701 PH: (715) 831-0654 • FX: (715) 831-6210 • E-MAIL: INFO@KLDS.NET	
		CHK BY: SCK	DWG NAME: GRADING		
		DATE: 10-04-16	APP'D: --/--/--		

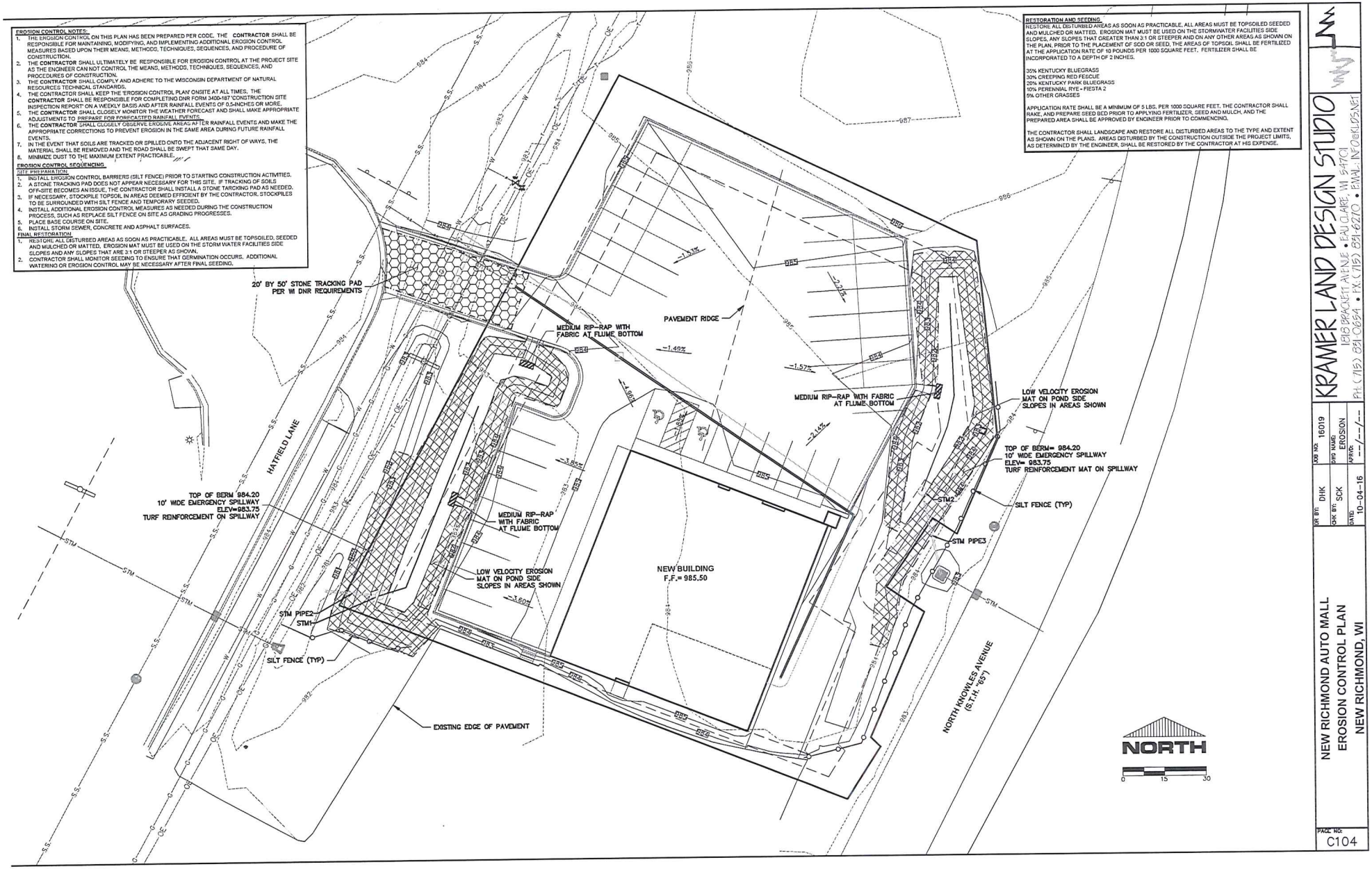

KRAMER LAND DESIGN STUDIO
1510 BRACKETT AVENUE • EAU CLAIRE, WI 54701
PH. (715) 831-0694 • FX. (715) 831-6210 • EMAIL: INFO@KLDS.NET

JOB NO:	16019
DWG NAME:	EROSION
APP'VD:	--/--/--
DR BY:	DHK
CHK BY:	SCK
DATE:	10-04-16

NEW RICHMOND AUTO MALL
EROSION CONTROL PLAN
NEW RICHMOND, WI

PAGE NO:
C104

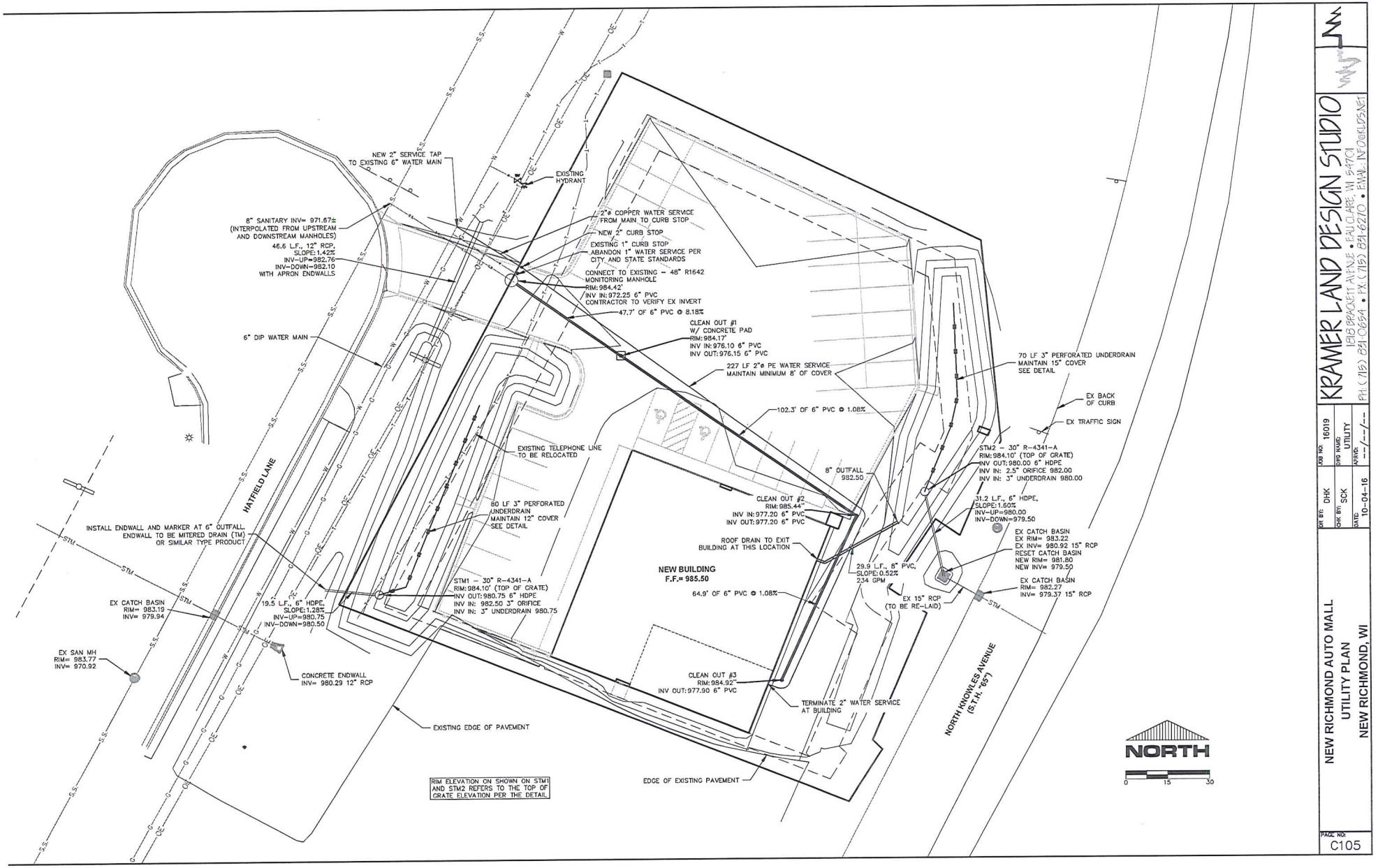

KRAMER LAND DESIGN STUDIO
136 BRACKETT AVENUE • EAU CLAIRE, WI 54701
PH: (715) 831-0654 • FX: (715) 831-6270 • EMAIL: INFO@KLDS.NET

JOB NO. 16019
DWG NAME UTILITY
APVD: --/--/--
DR BY: DHK
CHK BY: SCK
DATE: 10-04-16

NEW RICHMOND AUTO MALL
UTILITY PLAN
NEW RICHMOND, WI

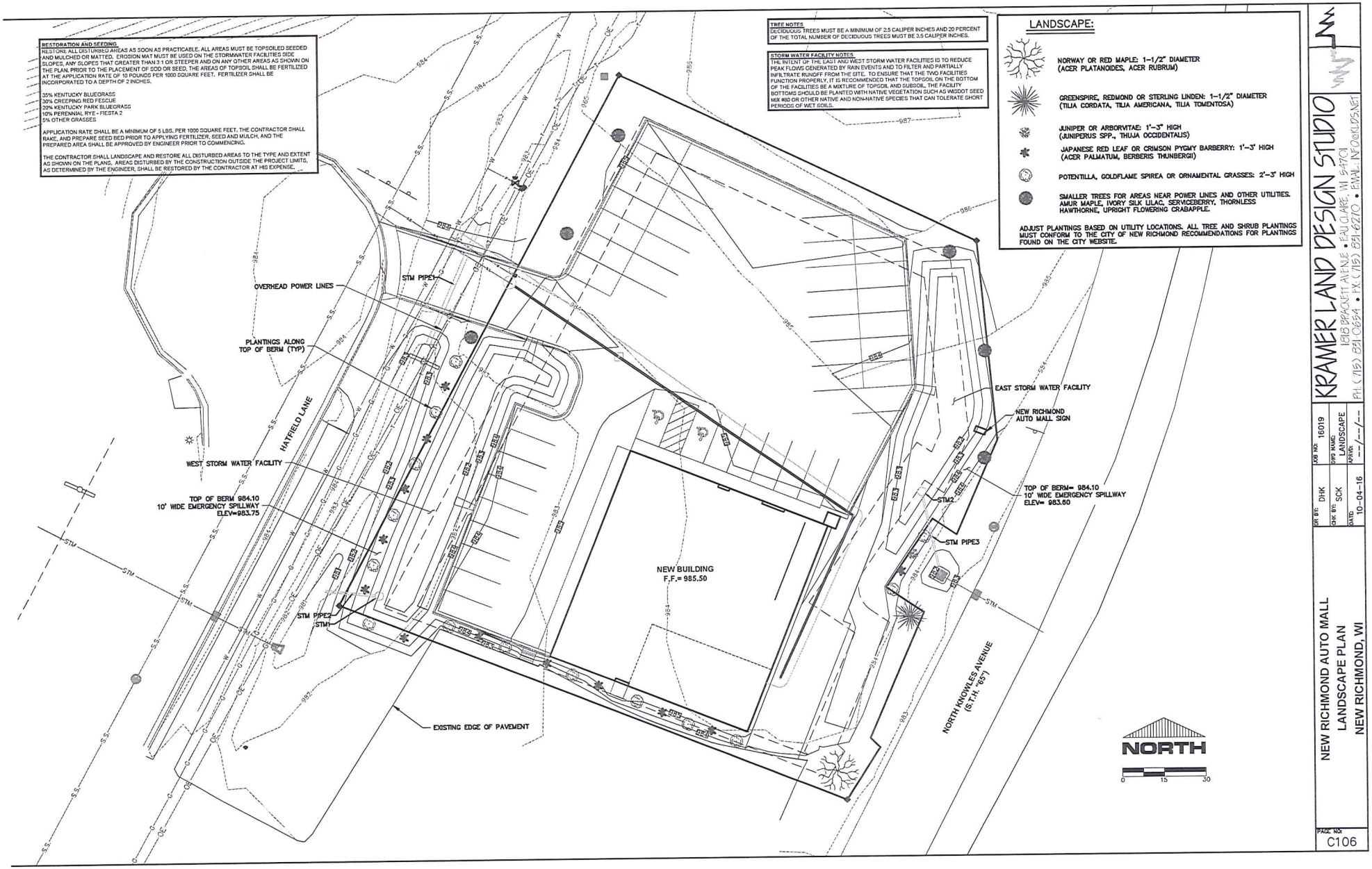

NEW RICHMOND AUTO MALL
LANDSCAPE PLAN
NEW RICHMOND, WI

DR BY: DHK
CHK BY: SCK
DATE: 10-04-16
JOB NO: 16019
DWG NAME: LANDSCAPE
APPVD: --/--/--

KRAMER LAND DESIGN STUDIO
1818 BRACKETT AVENUE • EAU CLAIRE, WI 54701
PH.(715) 831 0634 • FX.(715) 831 6210 • EMAIL: INFO@KLDS.NET

PAGE NO:
C106

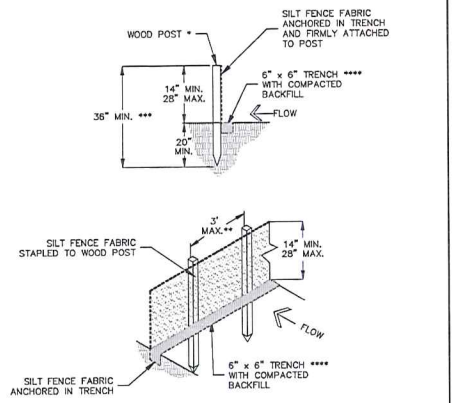

NOTES:
* WOOD POSTS SHALL BE A MINIMUM SIZE OF 1-½" X 1-½" OF EITHER OAK OR HICKORY.
** ADDITIONAL WOOD POST OR TIE BACKS MAY BE REQUIRED IN UNSTABLE SOILS.
*** ADDITIONAL DEPTH OF WOOD POST MAY BE REQUIRED IN UNSTABLE SOILS.
**** TRENCH SHALL BE A MINIMUM OF 4" WIDE & 6" DEEP TO BURY AND ANCHOR THE SILT FENCE FABRIC.

ERO 1 **SILT FENCE**
(DNR STD 1056)
N.T.S.

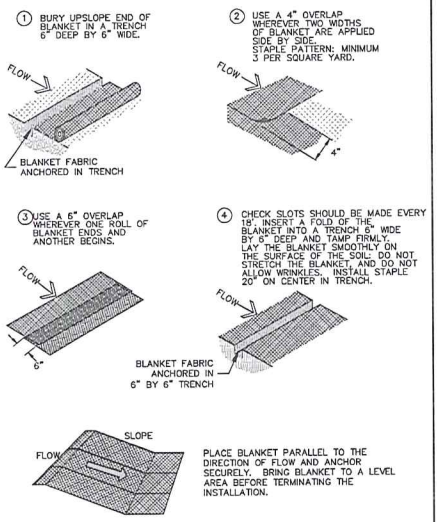

PLACE BLANKET PARALLEL TO THE DIRECTION OF FLOW AND ANCHOR SECURELY. BRING BLANKET TO A LEVEL AREA BEFORE TERMINATING THE INSTALLATION.

ERO 5 **EROSION MAT (NON CHANNEL)**
(DNR STD 1052)
N.T.S.

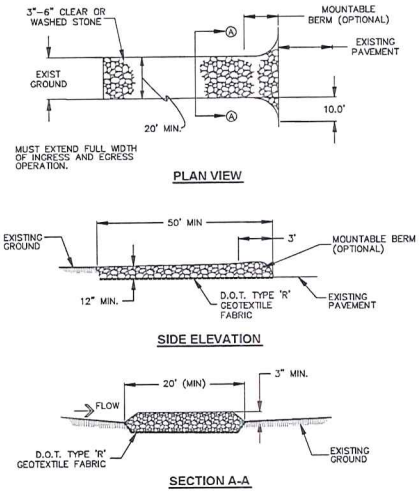

ERO 6 **STONE TRACKING PAD**
(DNR STD 1057)
N.T.S.

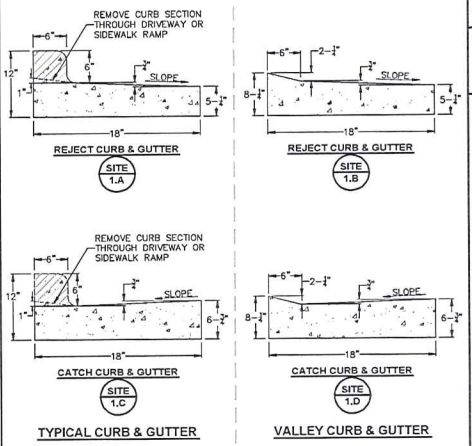

SITE 1 **18" WIDE CONCRETE CURB & GUTTER**
N.T.S.

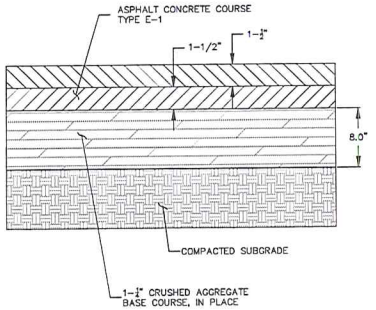

SITE 7 **TYPICAL ASPHALT SECTION**
N.T.S.

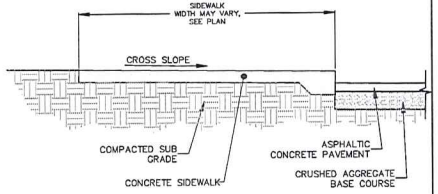

SITE 9 **SIDEWALK CURB**
N.T.S.

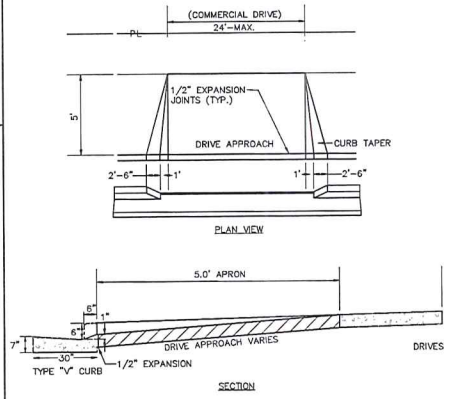

SITE 44 **DRIVEWAY APRON**
N.T.S.

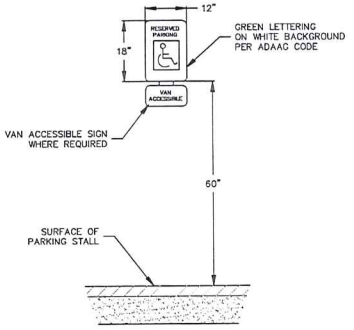

SITE 46 **ACCESSIBLE PARKING SIGN - WALL MOUNTED**
N.T.S.

KRAMER LAND DESIGN STUDIO
136 BRACKETT AVENUE • EAU CLAIRE, WI 54701
PH: (715) 831-0694 • FX: (715) 831-6270 • EMAIL: INFO@KLDS.NET

JOB NO.: 16019
DES BY: DHK
CHK BY: SCK
DATE: 10-04-16
DWG NAME: C500 DETAILS
APPVD: --/--/--

NEW RICHMOND AUTO MALL
CONSTRUCTION DETAILS
NEW RICHMOND, WI

PAGE NO: C500

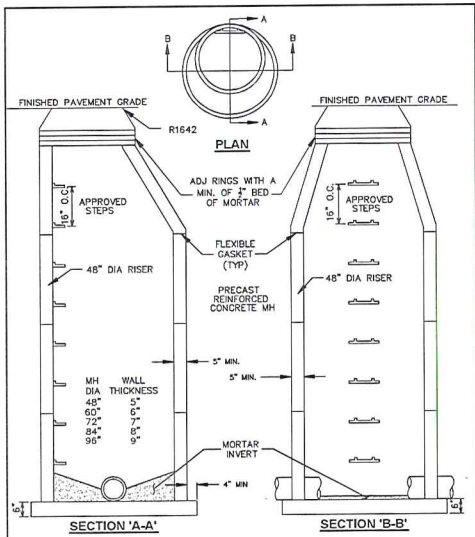

SAN 1 — STANDARD CONCRETE MANHOLE
N.T.S.

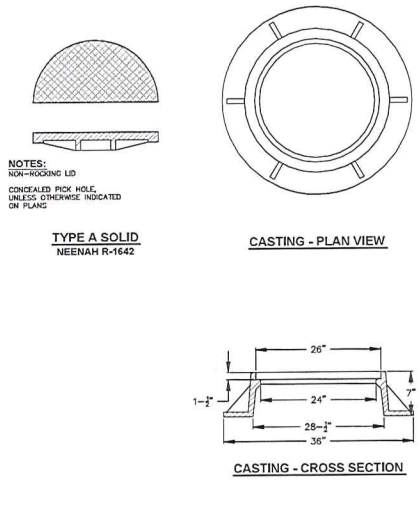

SAN 3 — SANITARY MANHOLE CASTING
N.T.S.

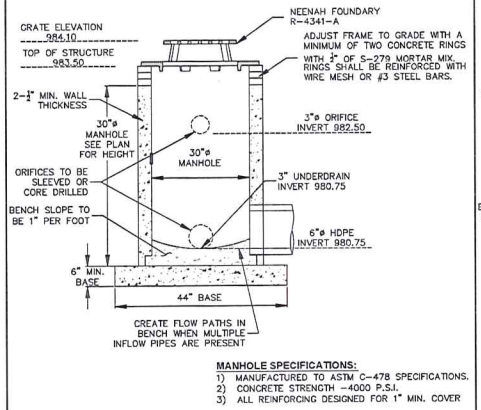

STM 1 — 30" DIA OUTFALL MANHOLE - WEST
N.T.S.

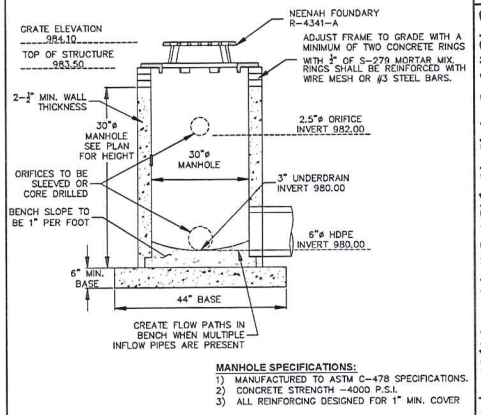

STM 2 — 30" DIA OUTFALL MANHOLE - EAST
N.T.S.

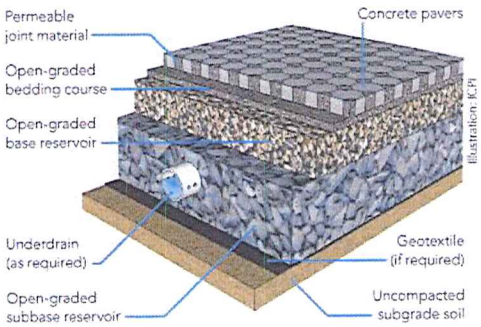

NOTE: CONTRACTOR TO FOLLOW MANUFACTURER'S SPECIFICATIONS AND/OR GUIDELINES FOR THE INSTALLATION OF THE PAVERS AND SUBGRADE MATERIALS

SITE 1 — PERMEABLE PAVERS
N.T.S.

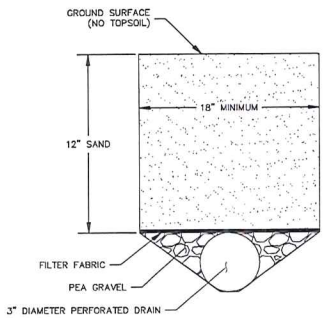

ERO 13 — SAND FILTER WITH UNDER DRAIN WEST INFILTRATION AREA

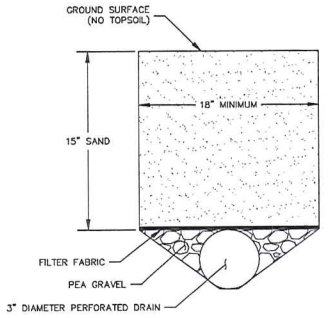

ERO 15 — SAND FILTER WITH UNDER DRAIN EAST INFILTRATION AREA

KRAMER LAND DESIGN STUDIO
1315 BRACKETT AVENUE • EAU CLAIRE, WI 54701
PH: (715) 831-0654 • FX: (715) 831-6270 • EMAIL: INFO@KLDS.NET

JOB NO: 16019
DWG NAME: C500 DETAILS
SHEET: 1 OF 1
DR BY: DHK
CHK BY: SCK
DATE: 10-04-16

NEW RICHMOND AUTO MALL
CONSTRUCTION DETAILS
NEW RICHMOND, WI

PAGE NO: C501

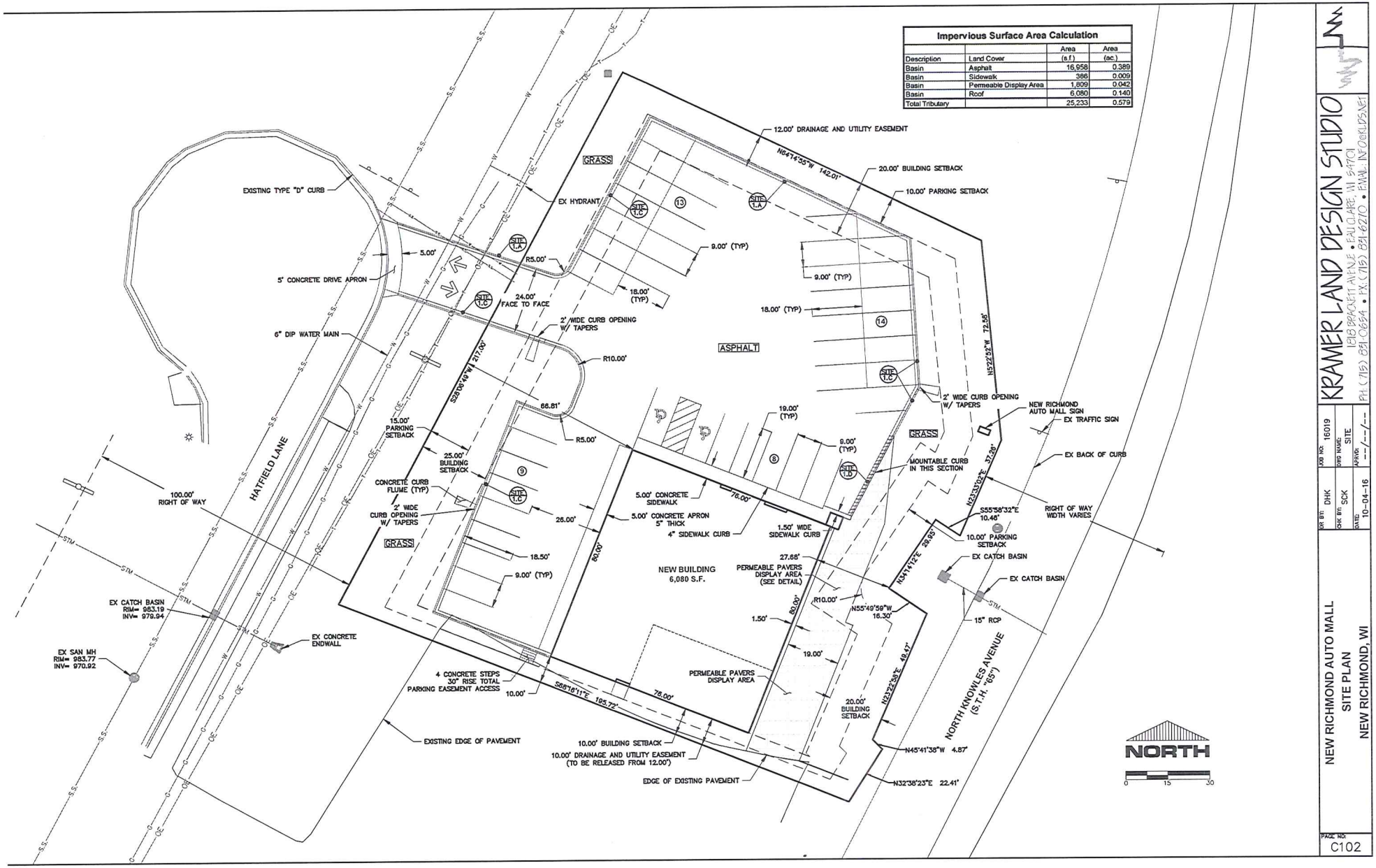

KRAMER LAND DESIGN STUDIO
1313 BRACKETT AVENUE • EAU CLAIRE, WI 54701
PH: (715) 831-0654 • FX: (715) 831-6210 • EMAIL: INFO@KLDS.NET

DRF BY: DHK
CHK BY: SCK
DATE: 10-04-16
JOB NO: 16019
DWG NAME: SITE
APROVE: ---/--/--

NEW RICHMOND AUTO MALL
SITE PLAN
NEW RICHMOND, WI

PAGE NO: C102